ARTICLE.

VERSION 1.0

Assembly Instructions

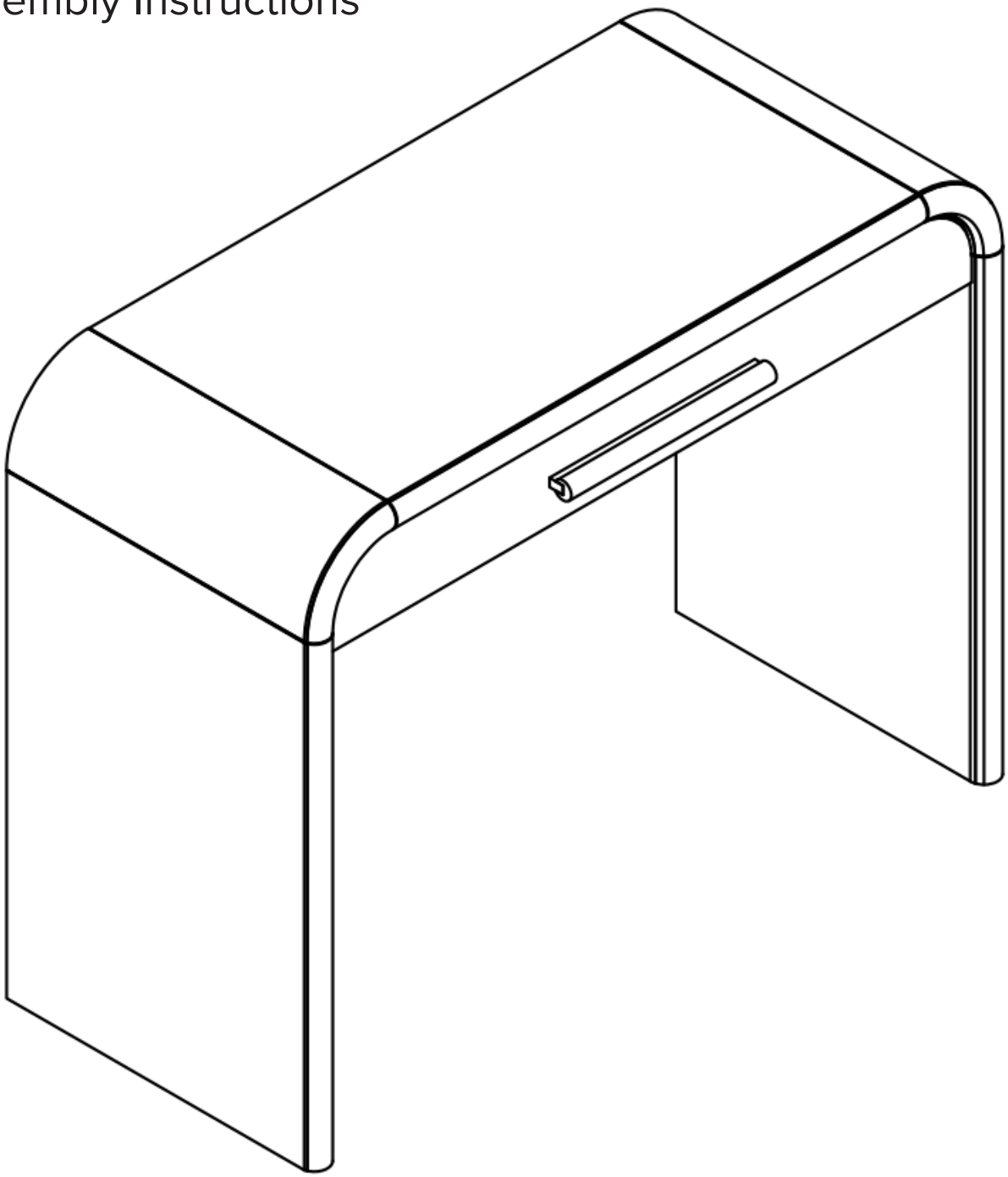

FAYDRA

Mini Desk

ARTICLE.

OF PEOPLE

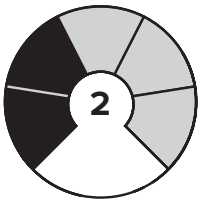

DIFFICULTY

ASSEMBLY INSTRUCTIONS

Read these instructions carefully and keep for future reference. Refer to parts inventory for guidance, and ensure you have all pieces before starting.

When assembling, place all parts on a soft, clean, and flat surface such as a carpet to prevent scratches.

If you're having difficulty, our friendly Customer Care team is always here to help. Call us at **1.888.746.3455** during business hours, email **service@article.com** or chat live at **article.com**.

PARTS INVENTORY		
ID	DESCRIPTION	QTY
A	M8 x 20MM BOLT 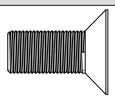	6
B	M6 x 30MM BOLT 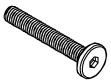	4
C	LOCK WASHER	4
D	WASHER	4
E	ALLEN KEY	1
F	TABLE TOP	1
G	LEFT LEG	1
H	LEFT RIGHT	1

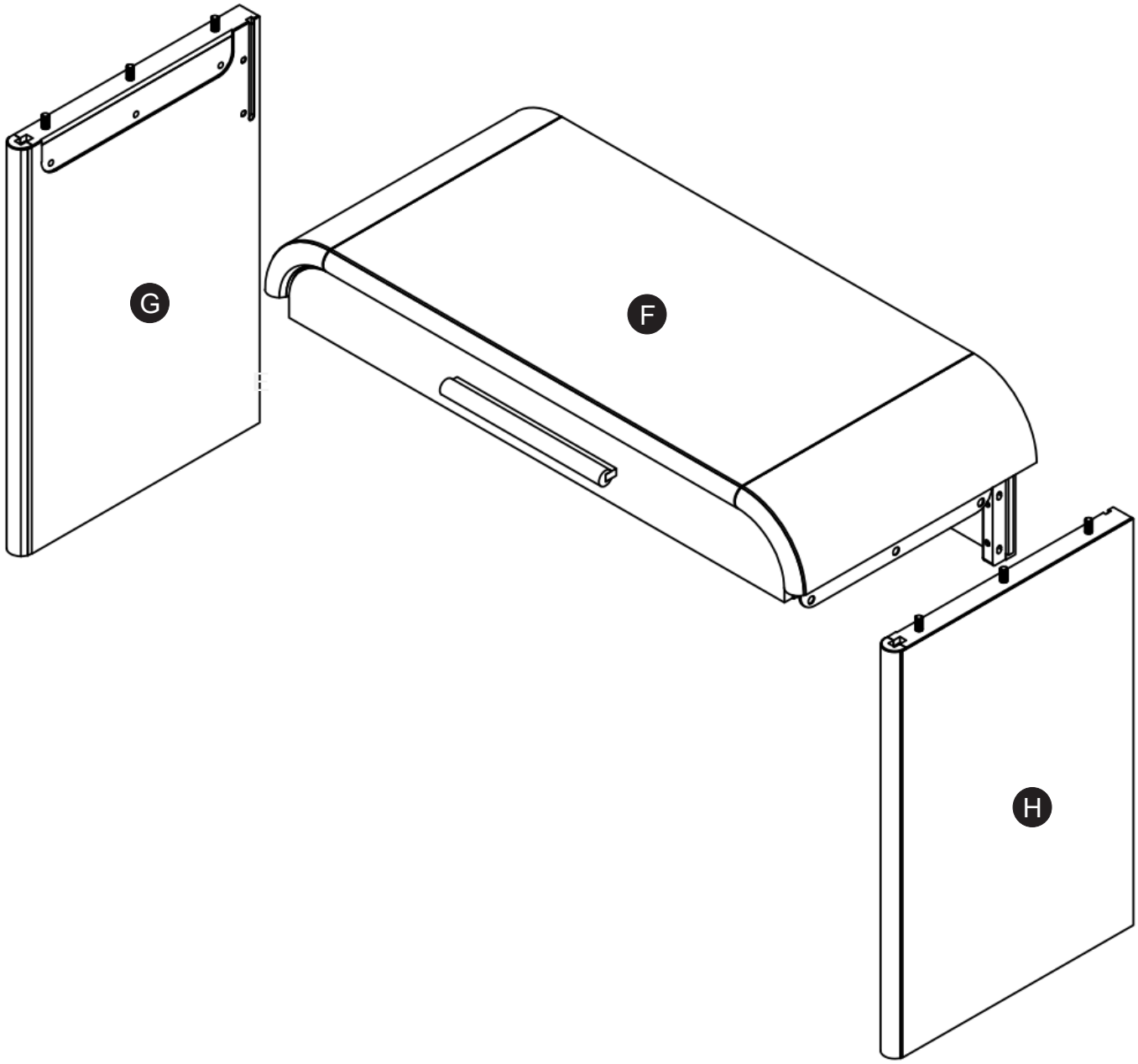
G
F
H

1

Please fasten the bolts at 70%

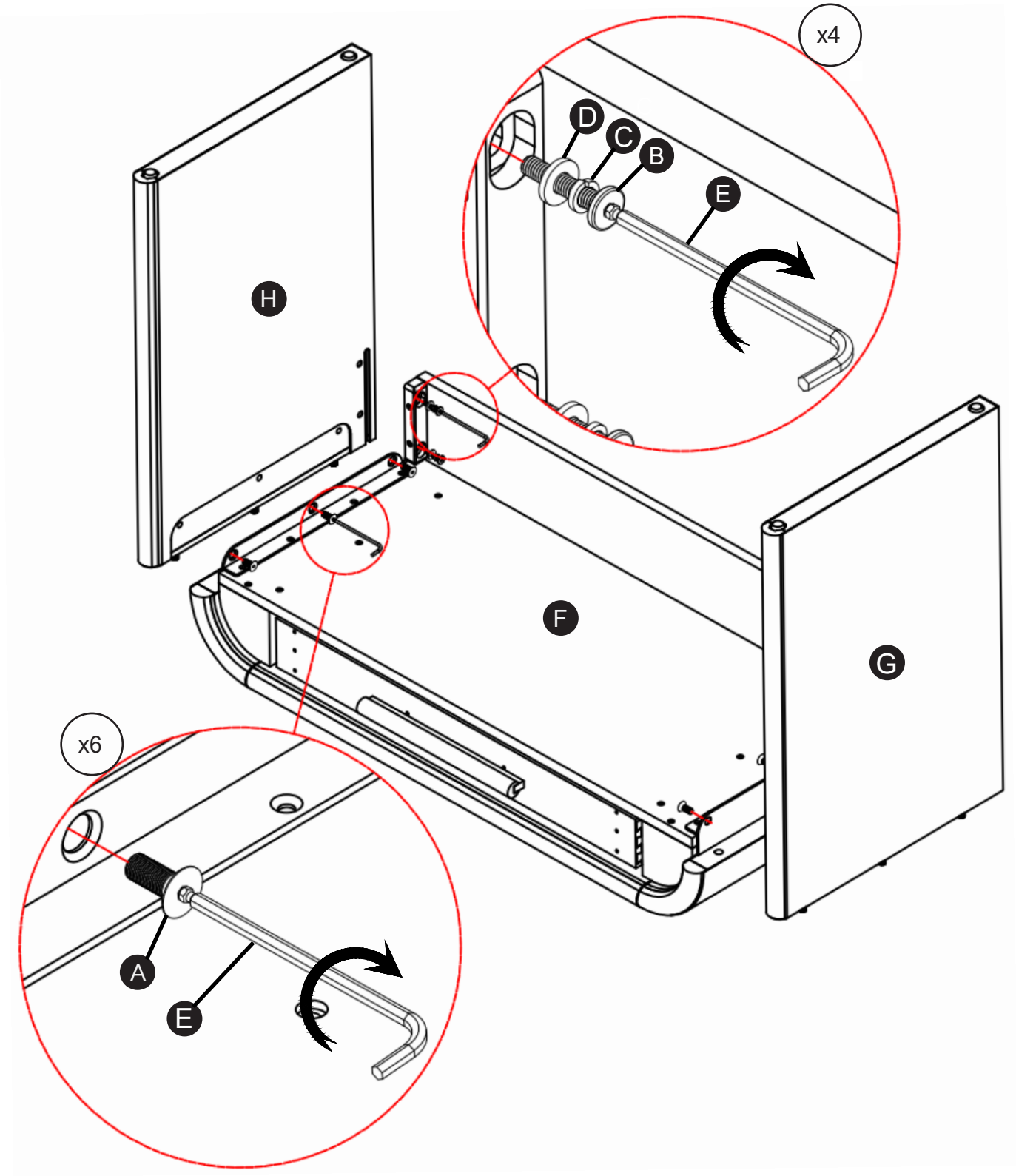

2

Fully tighend all bolts 100%

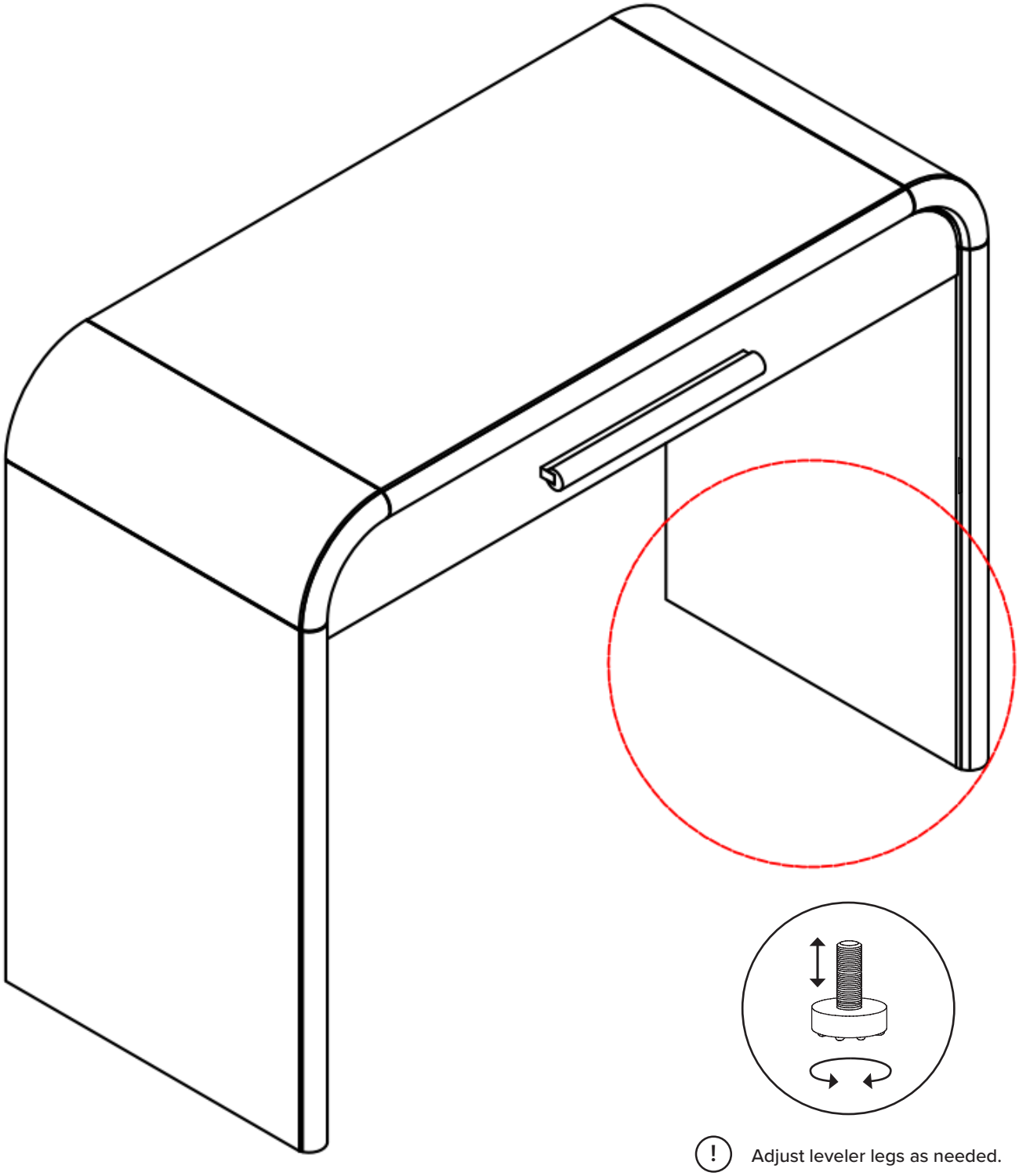

! Adjust leveler legs as needed.