ARTICLE.

VERSION 1.0

ASSEMBLY INSTRUCTIONS

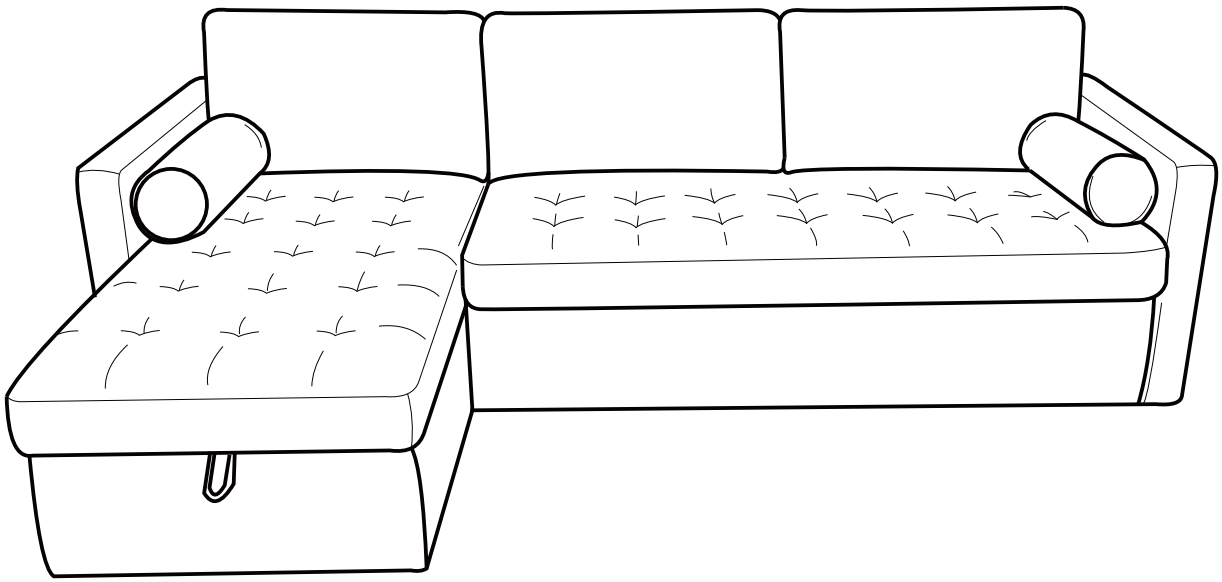

SVEN

Left Sleeper Storage Sectional

ASSEMBLY INSTRUCTIONS

Read these instructions carefully and keep for future reference. Refer to parts inventory for guidance, and ensure you have all pieces before starting.

When assembling, place all parts on a soft, clean, and flat surface such as a carpet to prevent scratches.

If you're having difficulty, our friendly Customer Care team is always here to help. Call us at **1.888.746.3455** during business hours, email **service@article.com** or chat live at **article.com**.

TIME

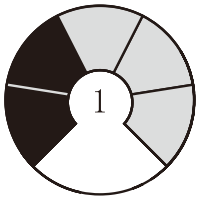

DIFFICULTY

OF PEOPLE

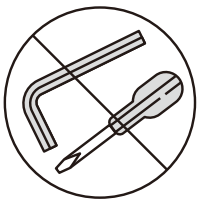

TOOL FREE

!

Hardware may loosen over time, check the bolts regularly and tighten if necessary.

PARTS INVENTORY		
ID	DESCRIPTION	QTY
A	Sofa Section	1
B	Left Chaise Section	1
C	Plastic Legs	8

1

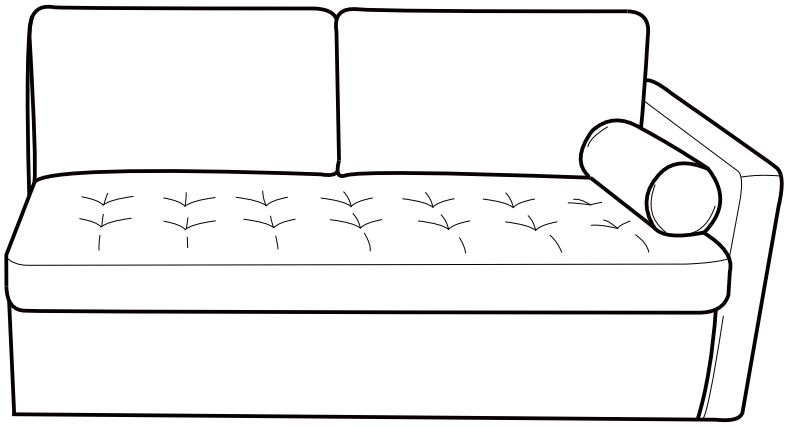

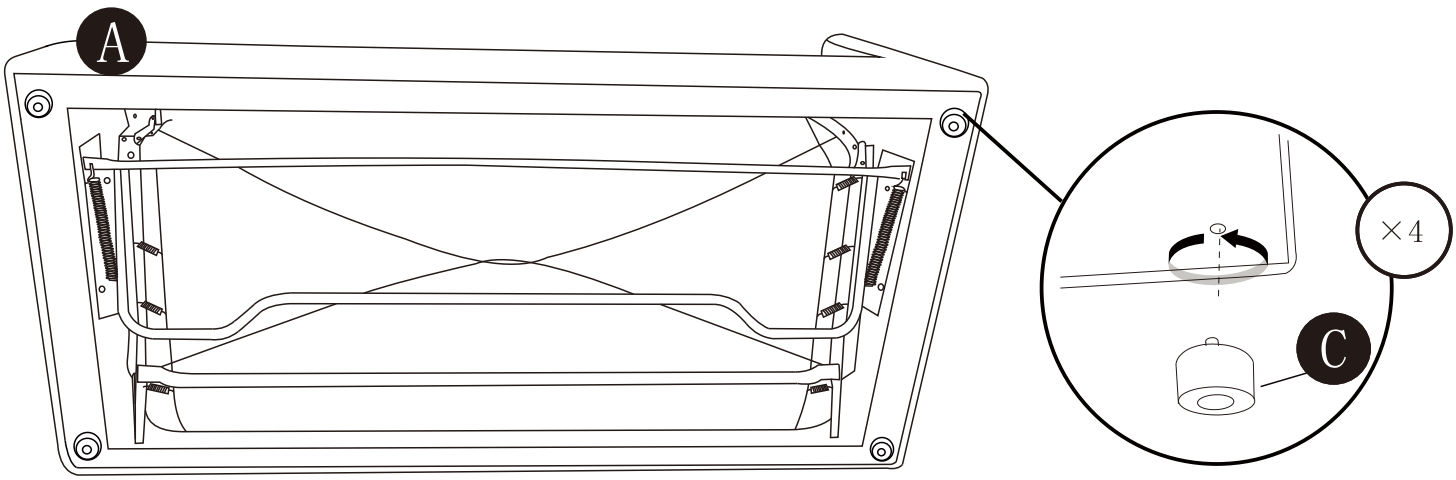

! The plastic legs of sofa section(A) are attached on the wrapped flim of sofa.

2

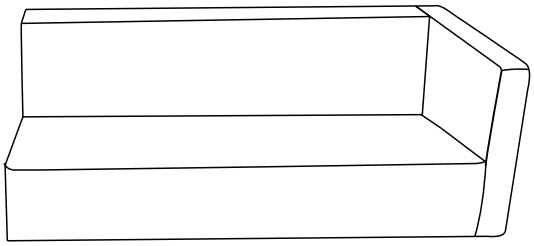

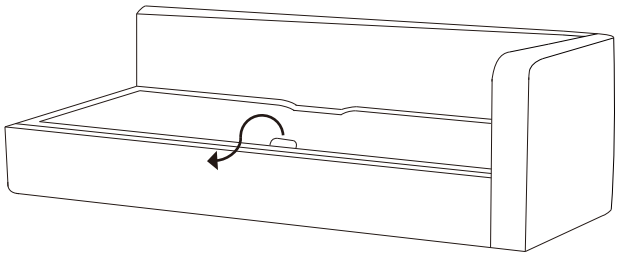

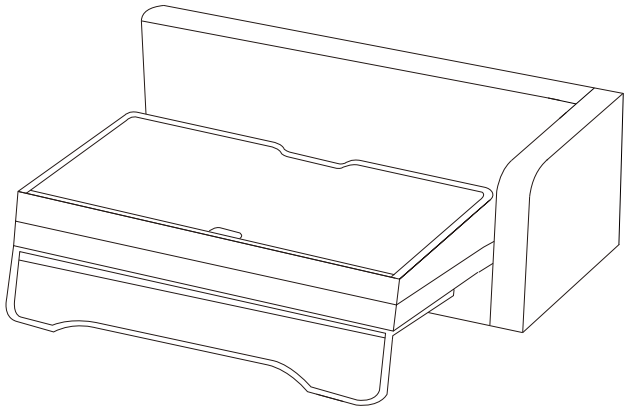

Use the handle at the front edge of the sofa to pull bed up and out.

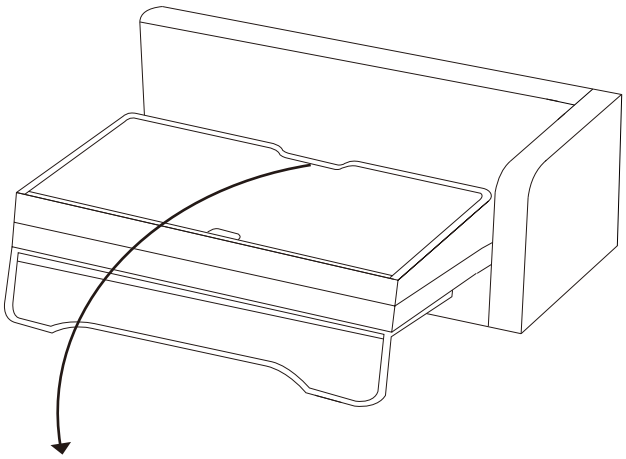

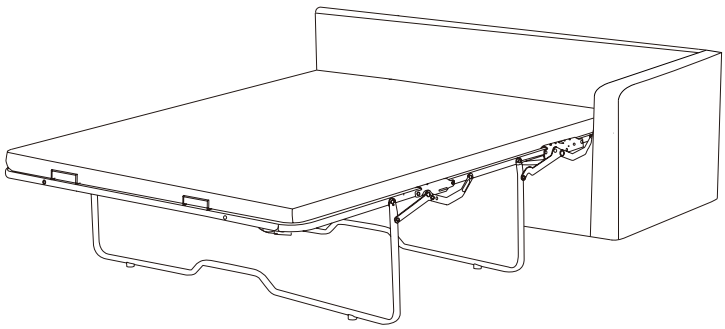

3

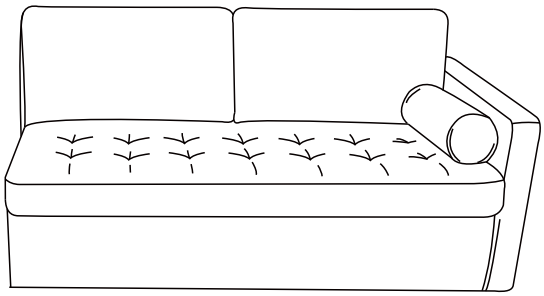

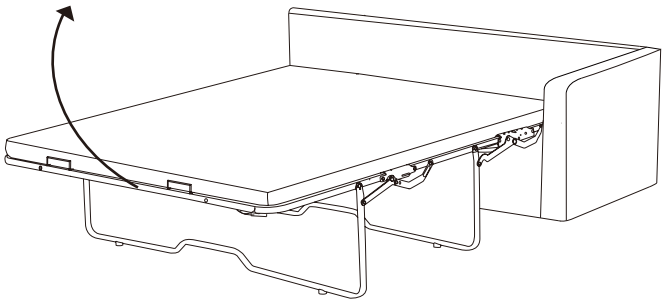

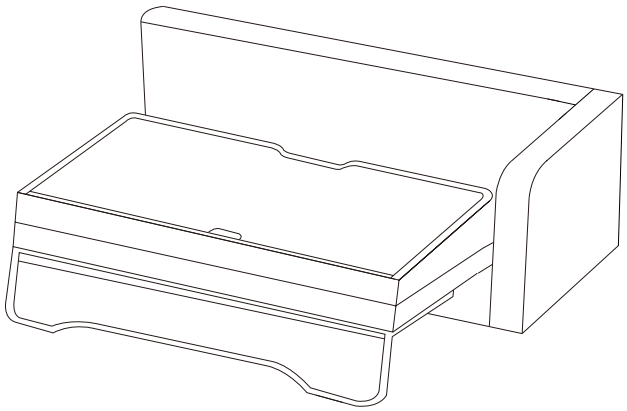

! Pull the second leg up, around, and under to fold mattress.

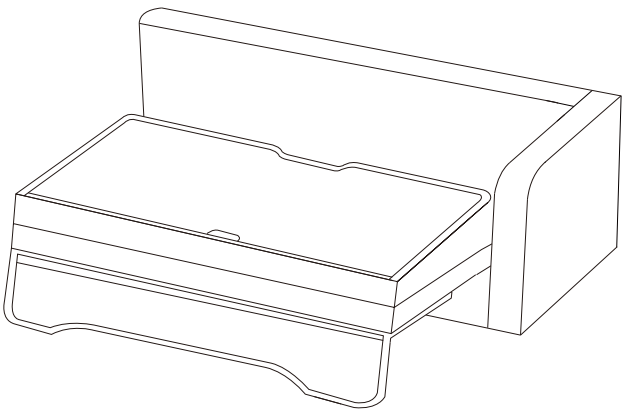

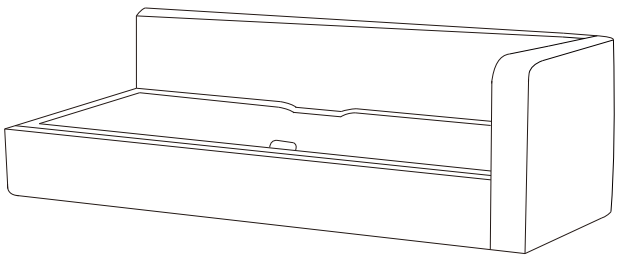

4

! The Handle can help open the storage box of chaise section.

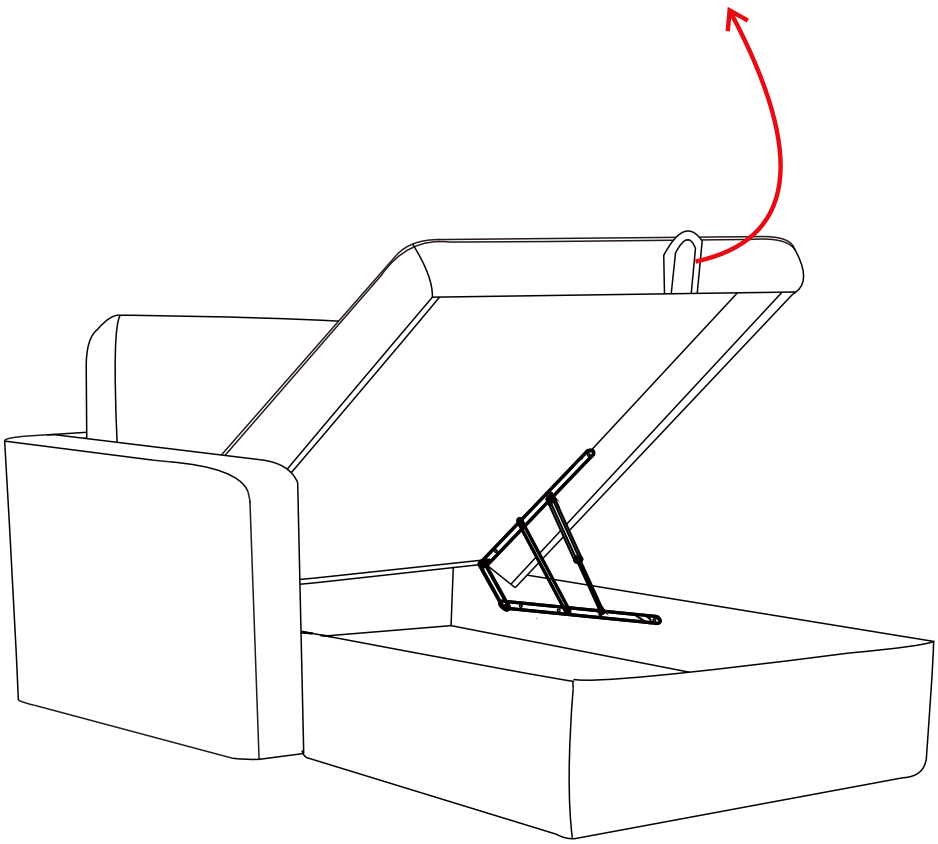

5

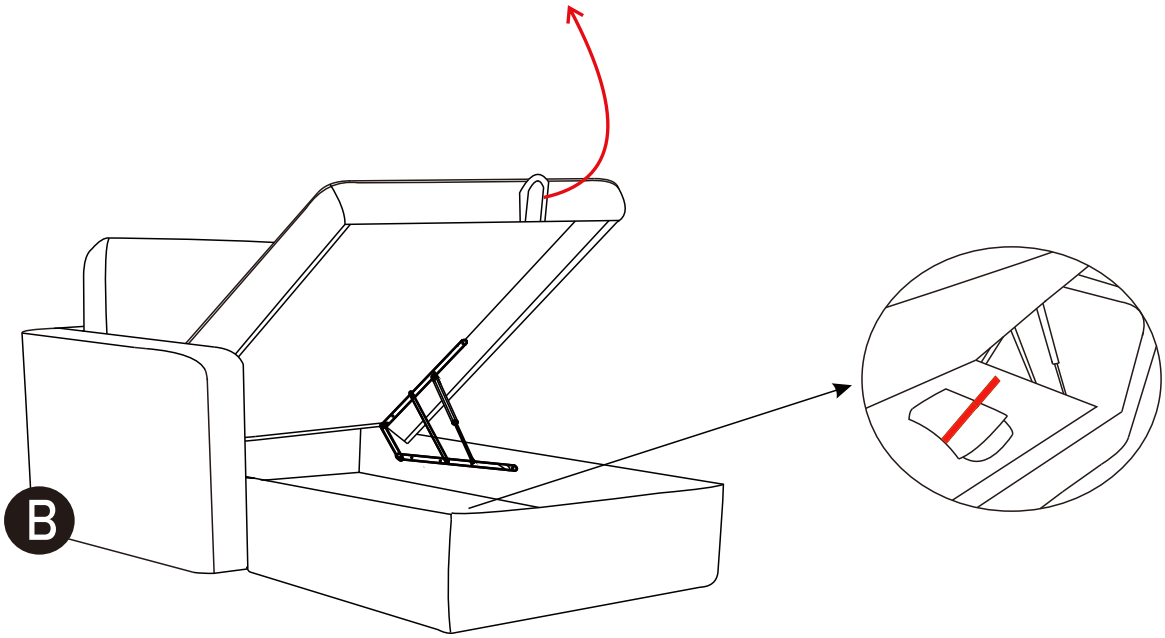

! Pick up the plastic legs of chaise section(B) from the storage box.

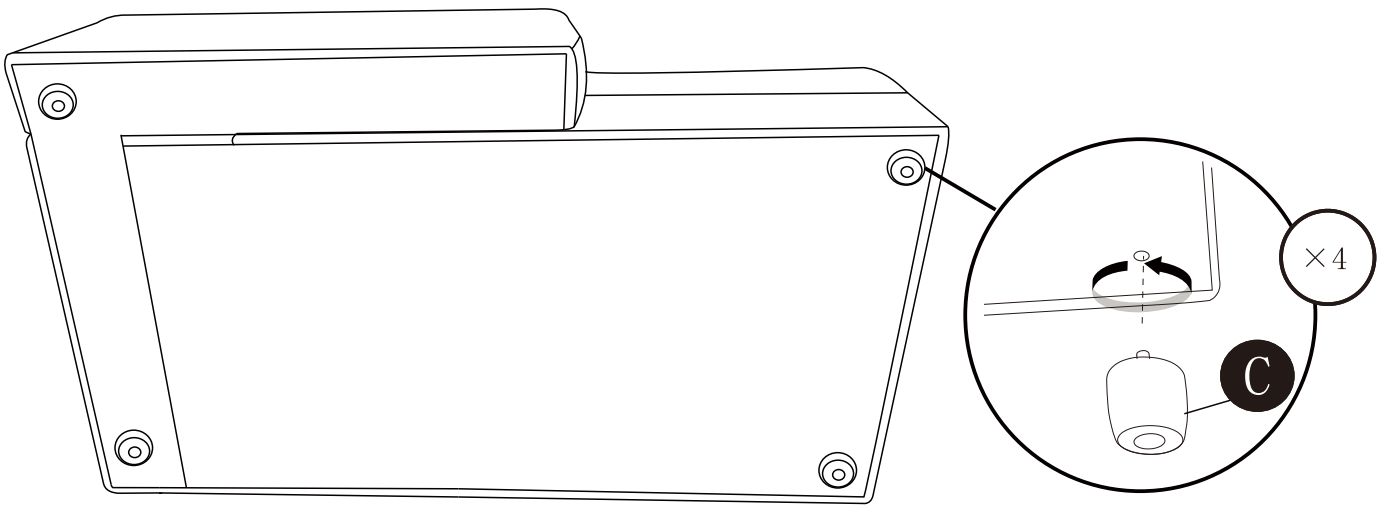
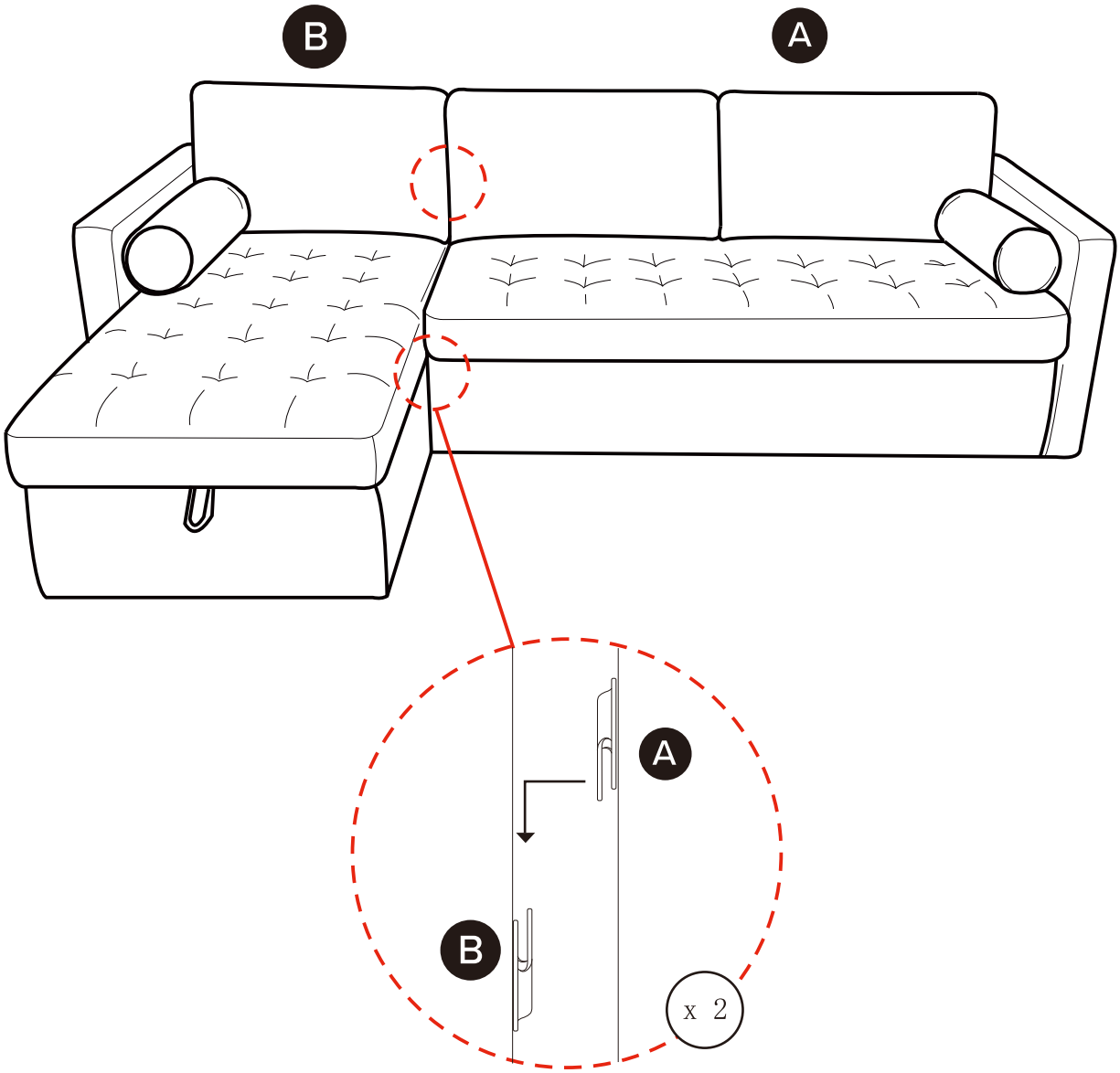
6