ARTICLE.

VERSION 2.0

Assembly Instructions

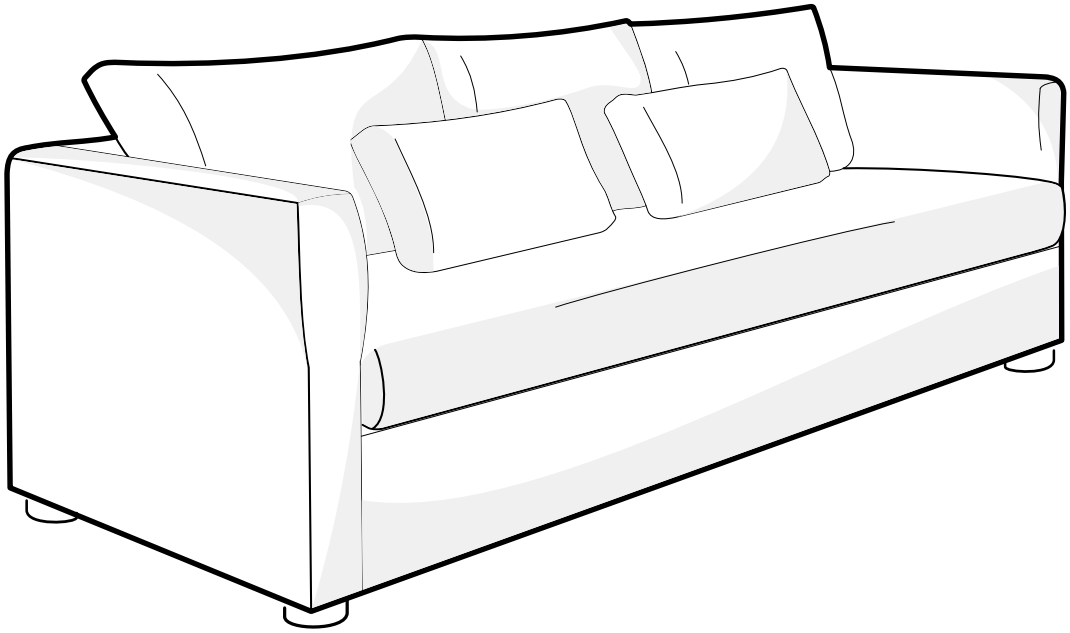

MARINA

Sofa Bed

2640-742

ASSEMBLY INSTRUCTIONS

Read these instructions carefully and keep for future reference. Refer to parts inventory for guidance, and ensure you have all pieces before starting. When assembling, place all parts on a soft, clean, and flatsurface such as a carpet to prevent scratches. If you're having difficulty, our friendly Customer Care team is always here to help. Call us at **1.888.746.3455** during business hours, email **service@article.com** or chat live at **article.com.**

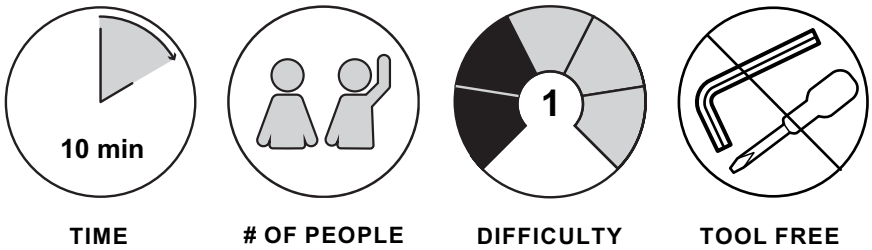

PARTS INVENTORY		
ID	DESCRIPTION	QTY
A	SOFA BED / QUEEN SIZE MATTRESS 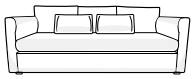	1/1
B	CENTER BACK CUSHION	1
C	SIDE BACK CUSHION	2
D	SEAT CUSHION SOFA	1
E	PILLOW	2
E	LEGS	4

- After using the bed, leave it open for a few hours to ensure the mattress has the opportunity to air out before packing away. People expel a surprising amount of moisture while sleeping, and it's important to give the mattress the chance to dry.
- If you are using the mattress/bed functionality regularly, flip the mattress over to allow the underside to air out too. Just be sure to flip it back so you only sleep on the memory foam.
- To clean your removable mattress cover, hand wash gently in cold water and hang to dry. Make sure it is completely dry before putting it back on your mattress.
- If you live in an older home, a humid climate, or keep the sofa bed in a room that is below ground-level, we recommend using a dehumidifier to protect your furniture from moisture.

1

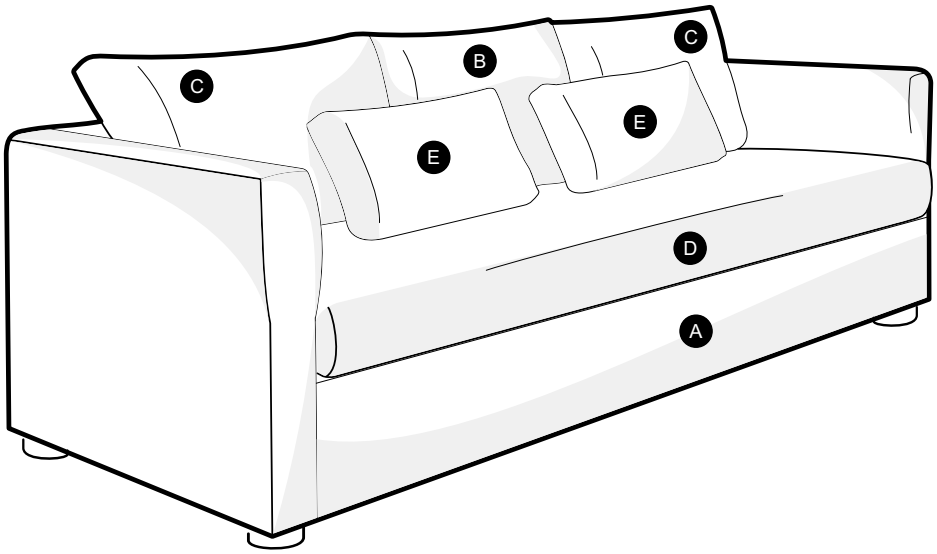

2

2.1

Before pulling out of the sofa bed ensure strips are removed.

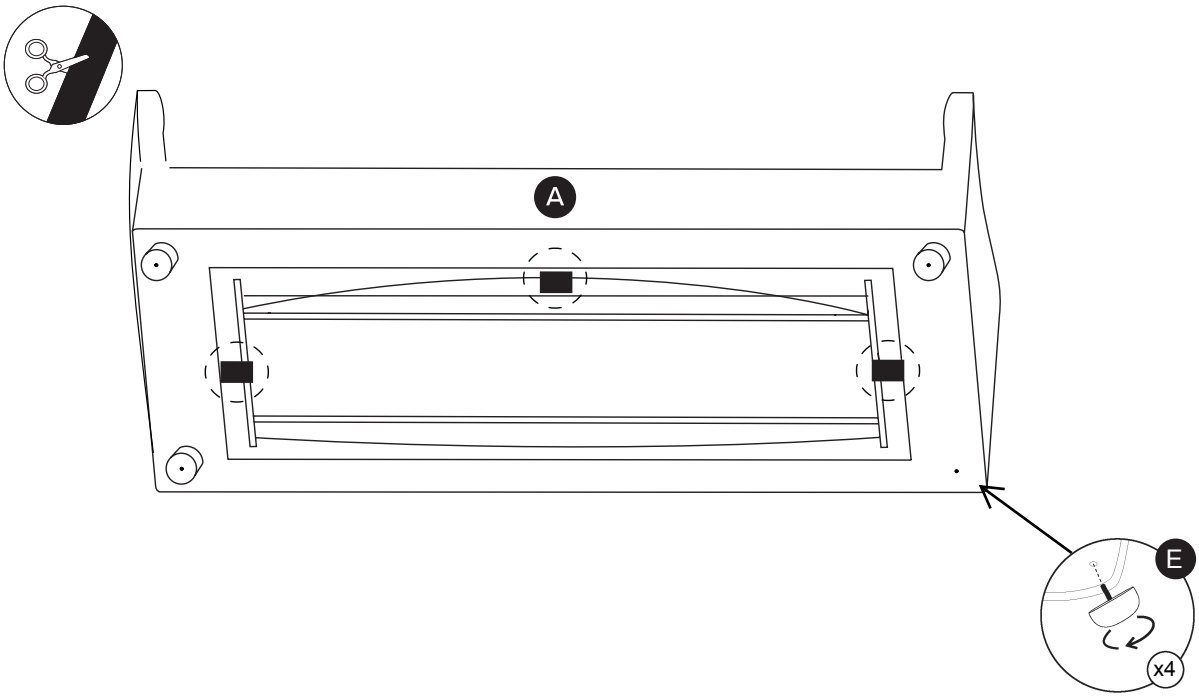

3

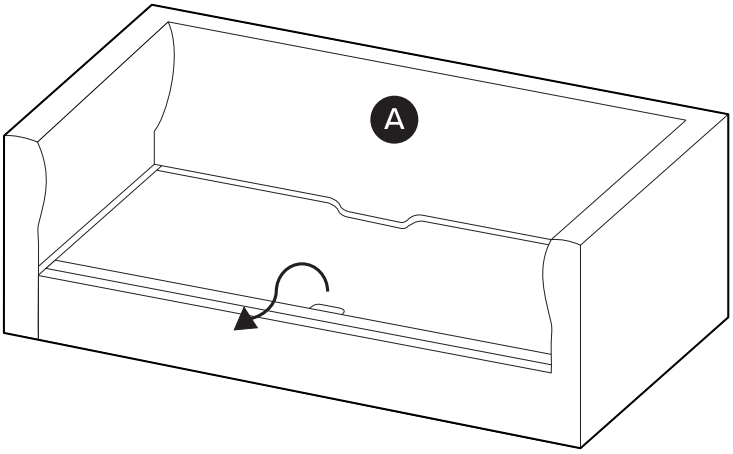

Remove the seat cushion and pillows.
Use the handle ar the front edge of the sofa to pull bed up out.

3B
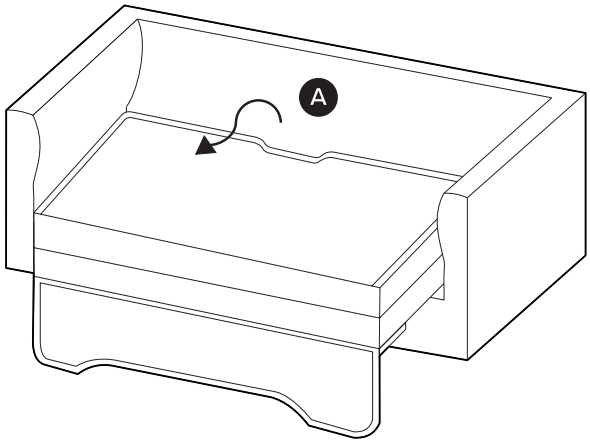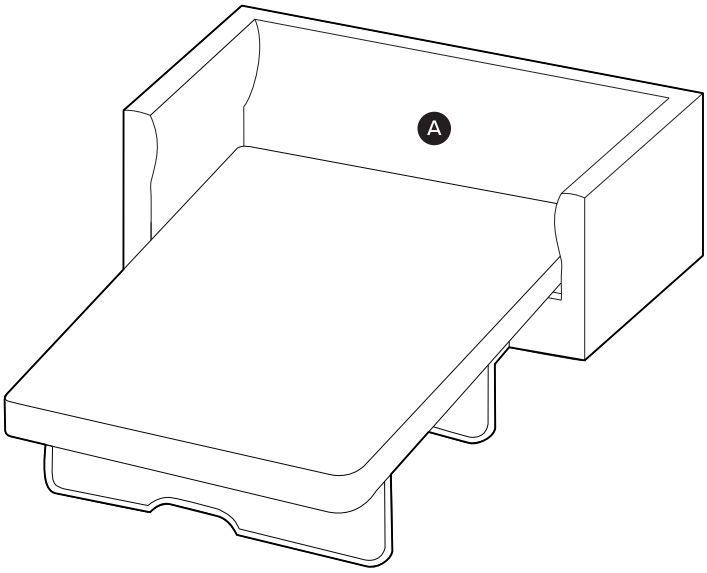
Pull second leg up, around, and under to unfold mattress.